A 42nJ/conversion On-Demand State-of-Charge Indicator for Miniature IoT Li-ion Batteries

Junwon Jeong[1,2], Seokhyeon Jeong[2], Chulwoo Kim[1], Dennis Sylvester[2] and David Blaauw[2]
Korea University, Seoul, Korea[1]; University of Michigan, Ann Arbor, MI[2]
jjw@kilby.korea.ac.kr

Abstract

An energy efficient State-of-Charge (SOC) indication algorithm and integrated system for small IoT batteries are introduced in this paper. The system is implemented in a 180-nm CMOS technology. Based on a key finding that small Li-ion batteries exhibit a linear dependence between battery voltage and load current, we propose an instantaneous linear extrapolation (ILE) algorithm and circuit allowing on-demand estimation of SOC. Power consumption is 42nW and maximum SOC indication error is 1.7%.

Introduction

Low power design techniques have led to very low power wireless sensor nodes for Internet of Things (IoT) applications. As a result, small capacity, miniature IoT batteries are increasingly used by these sensor nodes to reduce total system volume. In addition, energy harvesting is often used in such systems and battery levels fluctuate throughout operation due to diverse power draws and environment-dependent charging conditions. To enable intelligent power management, dynamic control of performance, and avoid battery damage, it is essential to know the battery SOC, which is the present charge inside the battery. Bookkeeping algorithms based on Coulomb counting are the most widely used approach to calculating SOC [1-2]. However, Coulomb counting is poorly suited to low power sensor nodes because current monitoring (i.e., current integration) is an always-on process that consumes significant power/energy (e.g., 180μW [2]). Furthermore, these methods suffer from charge error accumulation. Other works in this area have used Kalman filters, fuzzy logic, neural networks, or impedance spectroscopy. These approaches are expensive to implement in integrated circuits. Several circuit implementations aimed at determining SOC exist [3-4], however they only report on some components of the complete SOC system (e.g., current sensor [3] or coulomb counter [4]). Furthermore, many prior works lack measurements using actual batteries [1-4]. In this paper, we demonstrate a complete implementation of an SOC indicating system that does not require Coulomb counting, stabilization time, or disconnection of the battery from the load. The proposed system is power gated when an SOC indication is not needed, offering system designers a chance to reduce energy depending on how often battery state information is required.

Circuit Design

Fig. 1 compares the conventional and proposed SOC indication methods. SOC is defined as the battery's remaining capacity as a percentage of full charge capacity. Electro-motive force (EMF) is equivalent to the battery open circuit voltage (V_{OC}). It is widely known that EMF accurately correlates with SOC across age and temperature for Li-ion batteries. However, measuring EMF requires a long stabilization time after the battery is disconnected from the load (typically 25sec for 12μAh, or 40min for 4Ah Li-ion batteries), which is problematic for continuously operating sensor nodes (Fig. 1(a)). Alternatively, Coulomb counting consumes large power/energy and suffers from charge accumulation error (Fig. 1(b)). This work therefore proposes an instantaneous linear extrapolation (ILE) algorithm and circuit that enables energy efficient on-demand EMF estimation (Fig. 1(c)). The ILE algorithm is based on the key observation that small capacity batteries exhibit a unique linear dependence between battery voltage and load current (Fig. 2, right). The estimator therefore computes EMF by adding a small additional current to the load current and extrapolating EMF from the change in the battery voltage (Fig. 2, middle). During normal system operation the battery current I_B is load current I_L. Battery voltage V_B is denoted V_L and is measured. The circuit then applies an additional load current (I_{EX}) for a time duration D_{STABLE} and measures the new lower battery voltage, denoted V_{EX}. Finally, the circuit estimates EMF by linear extrapolation of the two known points ((I_L, V_L), (I_L+I_{EX}, V_{EX})).

Fig. 3 shows the top-level architecture and Fig. 4 presents several key waveforms of the complete SOC indicator based on the proposed ILE algorithm. A 3kΩ current sensing resistor (R_S) senses I_B. C_L emulates decoupling capacitance of the sensor node system while its current draw I_L is modeled by a DC current source. At the rising edge of EN_{SOC}, power gating signal V_{S_IND} is set and a single measurement begins. An adaptive current stabilizer (ACS) adjusts the value of I_{EX} based on the difference between V_L and V_{EX}. This guarantees low energy SOC characterization across a wide range of load currents. An LDO generates the internal supply voltage and the LDO is turned off unless V_{S_IND} is set. A battery current and voltage sensor is implemented to accurately sense I_L, V_L, and I_L+I_{EX}. A single shared ADC digitizes the values of I_L, V_L, and I_L+I_{EX}, which are then stored in D flip-flops. Due to a timing issue in the digital logic one of the output values (8 bits of D_{OUT}) was not correctly latched by the on-chip DFFs and required external recording.

Fig. 5 shows ACS schematic and waveforms. One design challenge is that I_L will naturally fluctuate as the sensor node performs various task during the SOC calculation timeframe (0.35ms). Adding a constant I_{EX} (Fig. 5, left) results in a changing I_L+I_{EX} as I_L fluctuates. Accurate measurement of V_{EX} would then require added stabilization time with a constant I_L+I_{EX}, which is impractical. Instead we apply an adaptive I_{EX} to the battery by regulating the difference between V_L and V_{EX} to be V_{REF_EX} using the ACS (Fig. 5, right). This yields a constant I_L+I_{EX}, ensuring stabilization and proper EMF calculation. Hence, a constant I_L is not required in the proposed approach.

Fig. 6 shows a schematic and timing diagram of the battery current and voltage sensor. The sensor uses switched capacitor amplifiers with an auto zeroing scheme (AZ). After an initial auto-zeroing period (triggered by V_{S_AZ}), the battery current and voltage sensor generates V_{O_IL} and V_{O_VL} with common mode voltage V_{CM}. A single ADC generates 8-bit binary data for both V_L and I_L. After obtaining the ADC output for I_L, V_{S_EX} is applied, injecting an adaptive I_{EX} for a time D_{STABLE}. The I_B sensor then generates V_{O_IL+IEX} and the same ADC provides 8-bit data for I_L+I_{EX}, completing the indication.

Measurement Results

Fig. 7 shows measurement results of the implemented SOC indicator according to I_L, aging, battery type, and temperature. To verify the accuracy, the measured EMF with ILE is compared with V_{OC} by slow voltage relaxation. Prior to system design, we experimentally confirmed that EMF yields an accurate estimation of SOC in small IoT batteries with little dependency on discharge cycle count and temperature by characterizing 12μAh Li-ion batteries (Fig. 8). The implemented system consumes 120μW for 0.35ms. Assuming the SOC is read once per second (indication frequency f_{ind}=1Hz) the average power consumption is 42nW. System designers can select an appropriate tradeoff of average power with rate of battery status updates. At 10μA I_L, 6 cycles, and 25°C temperature, the maximum error over V_{OC} is 5mV and maximum indication error is 1.7%

Table 1 provides a performance comparison table including several conventional SOC indicators. The proposed technique offers several orders of magnitude energy/power reduction, on-demand calculation, and high accuracy. Fig. 9 shows the chip micrograph in 180nm CMOS technology with 0.373mm^2 area.

References

[1] bq26231, Texas Instruments.
[2] bq26231, Texas Instruments.
[3] S. H. Shalmany et al., ISSCC. 2013.
[4] F. Neri et al., TCAS-I, 2013.

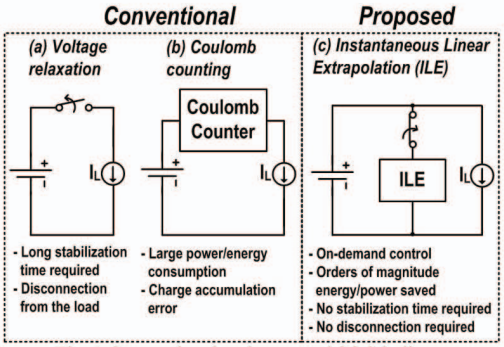

Fig. 1 Conventional and proposed SOC indicators

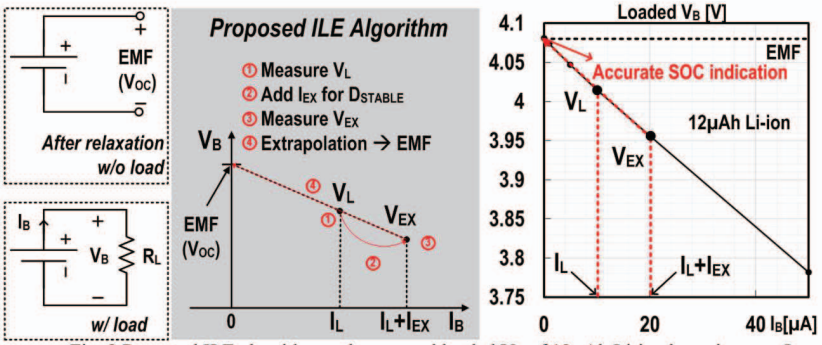

Fig. 2 Proposed ILE algorithm and measured loaded V_B of 12μAh Li-ion batteries over I_B

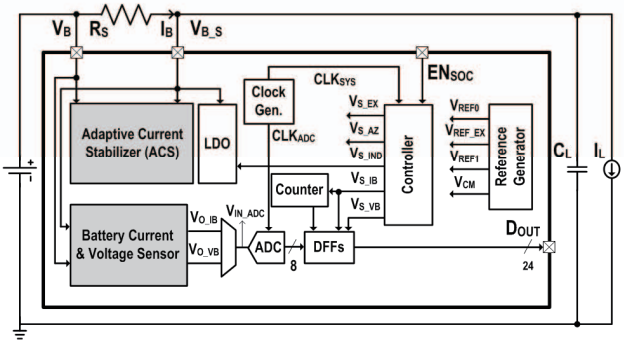

Fig. 3 Top architecture and timing diagram of the proposed SOC indicator

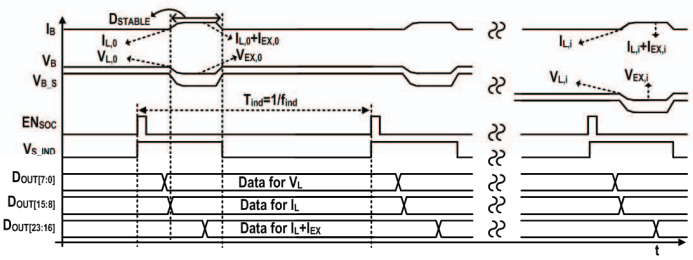

Fig. 4 Timing diagram of the proposed SOC indicator

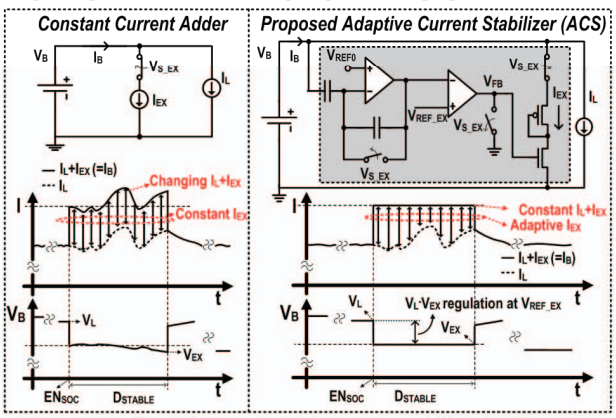

Fig. 5 Proposed adaptive current stabilizer (ACS)

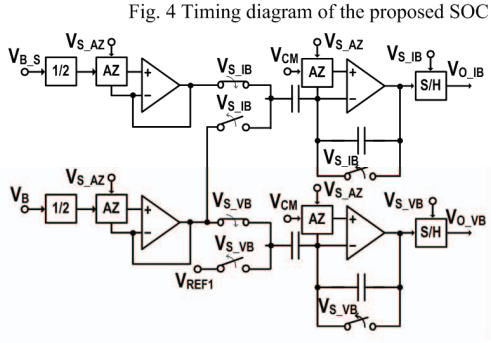

Fig. 6 Proposed battery current & voltage sensor

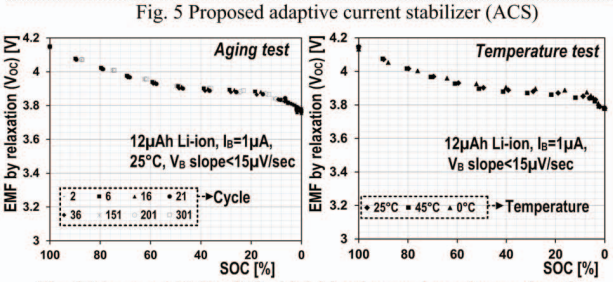

Fig. 8 Measured EMF of 12μAh Li-ion battery by voltage relaxation

Table 1. Comparison Table

	bq26231 [1]	bq27426 [2]*	TCAS-I [4]	This work
Process	N.A.	N.A.	40nm CMOS	0.18μm CMOS
Indication algorithm	Coulomb counting	Coulomb counting + V_{OC}	Coulomb counting	ILE
Power (μW)	385	180	135	0.042 @ f_{ind}=1Hz
Complete system	Yes	Yes	No	Yes
Max. indication error (%)**	N.A.	N.A.	N.A.	1.7
V_B (V)	2.8-5.5	2.45-4.5	2.5-3.3	3.2-4.2
R_S (Ω)	20m	10m	50m	3k

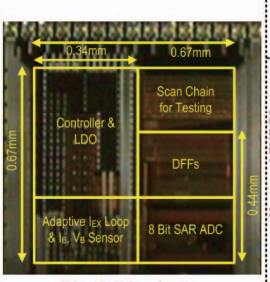

Fig. 9 Die photo

* provides SOC, remaining capacity information
** No indication error with real batteries is reported.

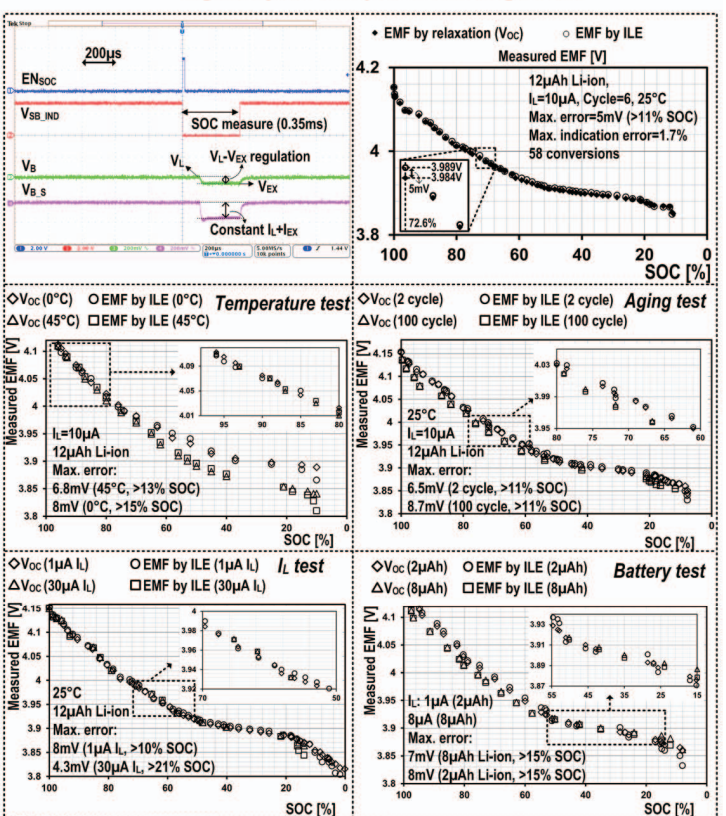

Fig. 7 Measured waveforms and EMF with ILE according to I_L, aging, battery type and temperature compared with V_{OC}